Panel Sign Family
Projecting Solid Bracket

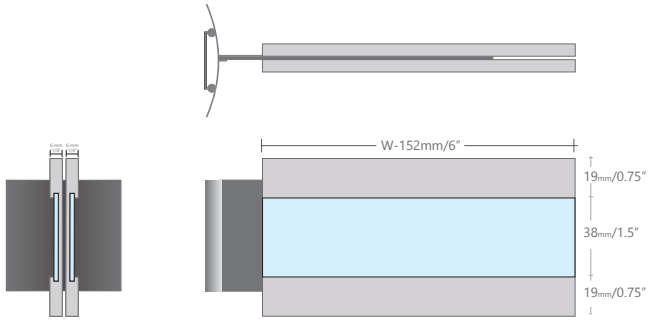

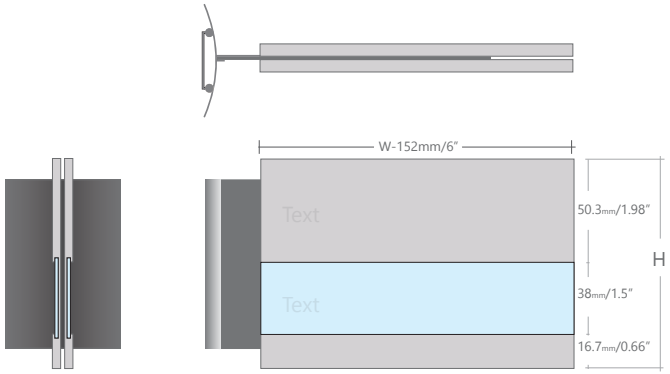

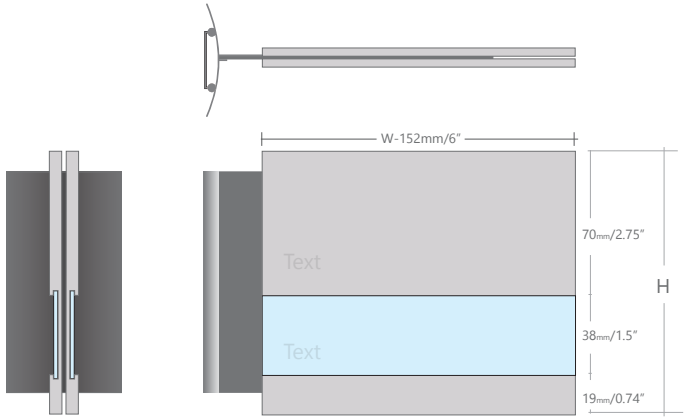

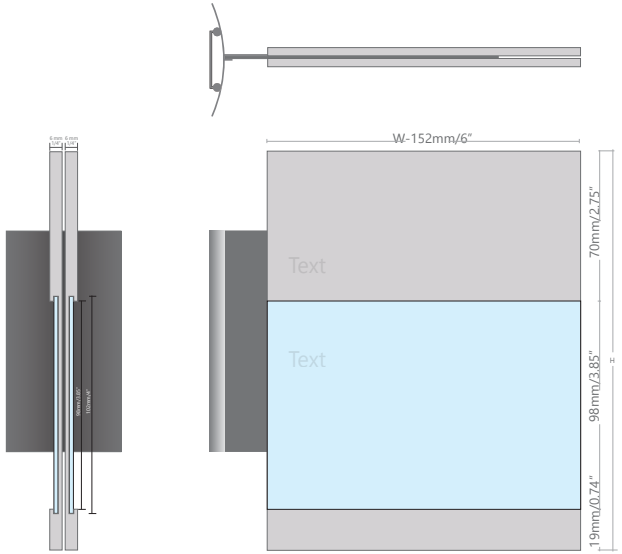

Standard sizes

No.	Part No.	H		W		
		mm	inch	102mm/4"	152mm/6"	216mm/8.5"
1	MirVP-76-W	76	3	■	■	■
2	MirVP-102-W	102	4	■	■	■
3	MirVP-127-W	127	5	■	■	■

3.0

a

EXTRUSION
are made from high quality aluminum 6063 thickness of 4 mm 1/6"
Standard
1. Clear anodized aluminum

Custom Made finish/color options:
1. powder coating
2. painting

b

GRAPHIC METHOD for Panels:
(Top & Bottom)
1. Silk Screen Printing
2. Digital Printing into Anodized Aluminum

ADA-Ready™ Panels:
1. .040 aluminum backed photopolymer

Updateable Inserts with Matt Acrylic cover:
1. Digital printing into acrylic
2. w/in-house computer paper inserts,
3. vinyl inserts, alum' inserts or materials with a small degree of flexibility, such acrylic, wood veneer...

MOUNTING BRACKET
finish/color options:
1. Mirtec clear anodized aluminum
2. Painted aluminum cap standard

d
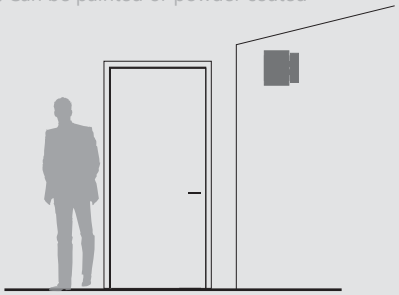
ACCENT BAR (available page no.*)
finish/color options:
1. Standard Mirtec anodized colors
2. Can be painted or powder coated